# Work Order ID 99543

*April-11-13 11:06:12 AM*

*99543*

**Item ID:** D2512
**Revision ID:**
**Item Name:** Basket Lid 205/350

**Accept** *N900040100*

**Setup** **Start** *NS1*
**Stop** *NS2*

**Start Date:** 4/11/13 **Start Qty:** 1.00 *1*
**Required Date:** 4/25/13 **Req'd Qty:** 1.00 *1*
**Reference:**

**Cust Item ID:**
**Customer:**

**Run** **Start** *NR1*
**Stop** *NR2*

**Approvals:** **Process Plan:** MLS **Date:** 13-04-11 **Tooling:** ________ **Date:** ________
**QC:** ________ **Date:** ________ **SPC (Y/N):** ________ **Date:** ________

| Sequence ID/ Work Center ID | Operation Description | Set Up/ Run Hours | Tool ID | Tool # | Plan Code | Accept Qty | Reject Qty | Reject Number | Insp. Stamp |
|---|---|---|---|---|---|---|---|---|---|

| Draw Nbr | Revision Nbr |
|---|---|
| D2512 | G |

| Sequence ID/ Work Center ID | Operation Description | Set Up/ Run Hours | Tool ID | Tool # | Plan Code | Accept Qty | Reject Qty | Reject Number | Insp. Stamp |
|---|---|---|---|---|---|---|---|---|---|
| 100<br>*100*<br>Large Fab<br>Large Fab | Weld per dwg A/R S.S. rod Batch: 124816<br>Large Fab<br>**Memo**<br>✓ 1- Weld ribs as per Dwg D2512 using Welding Jig DT 9436<br>X ***INSTALL D2012-117 CLEVIS ONLY ON D130-701-XXX***<br>✓ 2- WELD MESH AND REMOVE SECTIONS OF MESH WHERE INDICATED AS PER DWG | 0.00<br>0.00 | CPC 13.4.18 | | | 1x | ____ | ____ | ____ |
| 110<br>*110*<br>QC<br>Quality Control | QC9- Inspect visual per QSI004- Fusion Welds<br>**Memo** | 0.00<br>0.00 | | | | 13-04-18 | | | DAS 09 |

# Work Order ID 99543

*April-11-13 11:06:12 AM*

*99543*

**Item ID:** D2512

**Revision ID:**

**Item Name:** Basket Lid 205/350

**Accept** *N900040100*

**Setup Start** *NS1*

**Stop** *NS2*

**Start Date:** 4/11/13 **Start Qty:** 1.00 *1*

**Required Date:** 4/25/13 **Req'd Qty:** 1.00 *1*

**Reference:**

**Cust Item ID:**

**Customer:**

**Run Start** *NR1*

**Stop** *NR2*

**Approvals:** **Process Plan:** _____ **Date:** _____ **Tooling:** _____ **Date:** _____

**QC:** _____ **Date:** _____ **SPC (Y/N):** _____ **Date:** _____

| Sequence ID/ Work Center ID | Operation Description | Set Up/ Run Hours | Tool ID | Tool # | Plan Code | Accept Qty | Reject Qty | Reject Number | Insp. Stamp |
|---|---|---|---|---|---|---|---|---|---|
| 120 | QC6- Inspect dimensions to drawing | 0.00 | | | | | | | |
| *120* | | | | | | | 13-04-13 | | DAS 09 2-89 |
| QC | **Memo** | 0.00 | | | | | | | |
| Quality Control | | | | | | | | | |
| 125 | Pressure Wash per QSI005 4.3 | 0.00 | | | | | | | |
| *125* | | | | | | 1 | 13-4-18 | | |
| HandFinish | **Memo** | 0.00 | | | | | | | |
| Hand Finishing | | | | | | | | | |

# Work Order ID 99543

*April-11-13 11:06:12 AM*

*99543*

**Item ID:** D2512

**Revision ID:**

**Item Name:** Basket Lid 205/350

**Start Date:** 4/11/13 **Start Qty:** 1.00 *1*

**Required Date:** 4/25/13 **Req'd Qty:** 1.00 *1*

**Reference:**

**Accept** *N900040100*

**Setup Start** *NS1*

**Stop** *NS2*

**Cust Item ID:**

**Customer:**

**Run Start** *NR1*

**Stop** *NR2*

**Approvals:** **Process Plan:** _____ **Date:** _____ **Tooling:** _____ **Date:** _____

**QC:** _____ **Date:** _____ **SPC (Y/N):** _____ **Date:** _____

| Sequence ID/ Work Center ID | Operation Description | Set Up/ Run Hours | Tool ID | Tool # | Plan Code | Accept Qty | Reject Qty | Reject Number | Insp. Stamp |
|---|---|---|---|---|---|---|---|---|---|
| 130 | White Gloss(Ref:4.3.5.1) per QSI005 4.3-Alum | 0.00 | | | | | | | |
| *130* | | | | | | 1X | Ø | m/ | 13/04/19 |
| Powdercoat | **Memo** | 0.00 | | | | | | | |
| Powder Coating | 1- Plug all holes prior to Powdercoat<br>1ST COAT:<br>START TIME: 8:10<br>OVEN TEMPERATURE: 400 0F<br>FINISH TIME: 8:40<br>2ND COAT:<br>START TIME: 9:15<br>OVEN TEMPERATURE: 320 0F<br>FINISH TIME: 9:45 | | | | | | | | |
| M125069 | | | | | | | | | |
| 140 | HandFinishing | 0.00 | | | | | | | |
| *140* | | | | | | 1 | Ø | bl | 13-4-22 |
| HandFinish | **Memo** 119943 | 0.00 | | | | | | | |
| Hand Finishing | Wing Walk and Spray Paint black as per Dwg D2512 and QSI 005 4.4<br>Batch 111125182 | | | | | | | | |

# Work Order ID 99543

*April-11-13 11:06:12 AM*

*99543*

**Item ID:** D2512

**Revision ID:**

**Item Name:** Basket Lid 205/350

**Accept** *N900040100*

**Setup Start** *NS1*

**Stop** *NS2*

**Start Date:** 4/11/13 **Start Qty:** 1.00 *1*

**Required Date:** 4/25/13 **Req'd Qty:** 1.00 *1*

**Reference:**

**Cust Item ID:**

**Customer:**

**Run Start** *NR1*

**Stop** *NR2*

**Approvals:** **Process Plan:** _____ **Date:** _____ **Tooling:** _____ **Date:** _____

**QC:** _____ **Date:** _____ **SPC (Y/N):** _____ **Date:** _____

| Sequence ID/ Work Center ID | Operation Description | Set Up/ Run Hours | Tool ID | Tool # | Plan Code | Accept Qty | Reject Qty | Reject Number | Insp. Stamp |
|---|---|---|---|---|---|---|---|---|---|
| 150 | QC3- Inspect Part Finish | 0.00 | | | | | | | |
| *150* QC Quality Control | Memo | 0.00 | | | | | | | |
| 160 | Identify as per dwg & Stock Location: D350-607-041 | 0.00 | 99541 | | | 1 | ϕ | 13-4-22 | |
| *160* Packaging Packaging | Memo | 0.00 | | | | | | | |
| 170 | QC21- Final Inspection - Work Order Release | 0.00 | | | | | 13/4/23 | | |
| *170* QC Quality Control | Memo | 0.00 | | | | | | | |

DAS 16 13/04/22

13.04.23

# Picklist Print

*April-11-13 11:06:16 AM*



4

**Work Order ID:** 99543

*99543*

**Parent Item:** D2512

*D2512*

**Parent Item Name:** Basket Lid 205/350

**Start Date:** 4/11/13 **Required Date:** 4/25/13

**Start Qty:** 1.00 **Required Qty:** 1.00

**Comments:** Rev IPP:M03.01.31 AddedD2012-117forD130-701-041KJ/RF
IPP Rev:N 06.04.05 Added level21 EC
IPP REV:O ADDED D3490-1/-3 FOR D130-701-011/-043 10-04-20 JLM
VERIFIED BY:DD
IPP Rev:P 08-08-29 revE as per dwg DD verified by:EC
IPP Rev:Q 08-09-24 plug holes prior to powder coating DD verified by:EC IPP Rev:R
10.06.29 added pressure wash DD verf:EC IPP REV:S 12.07.27 AS PER DWG REV.F DD VERF:EC IPP REV:T 12.08.08 AS PER DWG REV.G DD VERF:EC

| Component Item ID/ Item Name | Replacement Item ID | Mfg/ Purch | Bin Item | Primary Location | Last Location | Route Seq ID | Unit of Measure | Qty on Hand | Qty per Kit | Total Qty | Qty Issued | Date Issued | Status |
|---|---|---|---|---|---|---|---|---|---|---|---|---|---|
| D2012-117 | | Manufactured | No | | | 100 | Each | 43.0000 | 2 | 2 | | | |
| *D2012-117* | | | | | | | | | ** | | | | |
| Clevis | | | | | | | | | | | | | |
| Cpl 13.4.18 | | N/A | | | | | | | | | | | |
| | | | | Location | | | Loc Qty | | Loc Code | | | | |
| | | | | WA004 | | | 43 | | | | | | |
| | | | | | 69890 | | 23 | | | | | | |
| | | | | | 98509 | | 20 | | | | | | |
| *** ONLY APPLICABLE ON D130-701-041 -IF NOT USED, PLEASE MARK N/A *** | | | | | | | | | | | | | |
| D2232-1 | | Manufactured | No | | | 100 | Each | 16.0000 | 2 | 2 | | | |
| *D2232-1* | | | | | | | | | ** | Cpl 13.4.18 | | | |
| Basket Hinge | | | | | | | | | | | | | |
| | | | | Location | | | Loc Qty | | Loc Code | | | | |
| | | | | WA | | | 15 | | | | | | |
| | | | | | 98362 | | 15 | | | 2 | | | |
| | | | | WA004 | | | 1 | | | | | | |
| | | | | | 79472 | | 1 | | | | | | |

# Picklist Print



*April-11-13 11:06:16 AM*

**Work Order ID:** 99543 *99543*

**Parent Item:** D2512 *D2512*

**Parent Item Name:** Basket Lid 205/350

**Start Date:** 4/11/13 **Required Date:** 4/25/13

**Start Qty:** 1.00 **Required Qty:** 1.00

| | | | | | | | | | |
|---|---|---|---|---|---|---|---|---|---|
| ✓ D2236 *D2236* Lid Rib | Manufactured | No | 100 | Each | 12.0000 | ** | 4 | 4 | Cp( 13.4.18 B99549 → (4) |
| ✓ D2506 *D2506* Label Plate | Manufactured | No | 100 | Each | 10.0000 | ** | 1 | 1 | Cp( 13.4.18 B98496 → (1) |
| ✓ D2512-3 *D2512-3* Rib | Manufactured | No | 100 | Each | 12.0000 | ** | 2 | 2 | Cp( 13.4.18 B96150 → (2) |
| ✓ D2512-5 *D2512-5* Rib | Manufactured | No | 100 | Each | 40.0000 | ** | 6 | 6 | Cp( 13.4.18 B99047 → (6) |

D2236 – Lid Rib

| Location | Loc Qty | Loc Code |
|---|---|---|
| WA005 | 12 | |
| 98512 | 12 | |

D2506 – Label Plate

| Location | Loc Qty | Loc Code |
|---|---|---|
| WA004 | 10 | |
| 98496 | 10 | |

D2512-3 – Rib

| Location | Loc Qty | Loc Code |
|---|---|---|
| WA | 10 | |
| 96150 | 10 | |
| WA005 | 2 | |
| 98322 | 2 | |

D2512-5 – Rib

| Location | Loc Qty | Loc Code |
|---|---|---|
| WA | 36 | |
| 99047 | 36 | |
| WA004 | 4 | |
| 96221 | 4 | |

# Picklist Print

*April-11-13 11:06:16 AM*

**Work Order ID:** 99543 *99543*

**Parent Item:** D2512 *D2512*

**Parent Item Name:** Basket Lid 205/350

**Start Date:** 4/11/13 **Required Date:** 4/25/13

**Start Qty:** 1.00 **Required Qty:** 1.00

D2512-7 Manufactured No 100 Each 36.0000 3 3

*D2512-7* **

Rib

Gpl 13.4.18

398071 → (3)

| Location | | Loc Qty | Loc Code |
|---|---|---|---|
| WA004 | | 6 | |
| | 98500 | 6 | |
| WA006 | | 30 | |
| | 98071 | 30 | |

D2581 Manufactured No 100 Each 90.0000 2 2

*D2581* **

Mounting Bracket

Gpl 13.4.18

| Location | | Loc Qty | Loc Code | |
|---|---|---|---|---|
| WA | | 58 | | |
| | 96599 | 14 | | (2) |
| | 98503 | 44 | | |
| WA004 | | 32 | | |
| | 70766 | 2 | | |
| | 81253 | 1 | | |
| | 82506 | 2 | | |
| | 83230 | 3 | | |
| | 85452 | 2 | | |
| | 87706 | 2 | | |
| | 98108 | 20 | | |

D3825-043 Manufactured No 100 Each 14.0000 2 2

*D3825-043* **

Rib Assembly (Basket End, Lid)

Gpl 13.4.18

| Location | | Loc Qty | Loc Code | |
|---|---|---|---|---|
| WA004 | | 14 | | |
| | 96242 | 10 | | (2) |
| | 98091 | 4 | | |

# Picklist Print

*April-11-13 11:06:16 AM*

**Work Order ID:** 99543

*99543*

**Parent Item:** D2512

*D2512*

**Parent Item Name:** Basket Lid 205/350

**Start Date:** 4/11/13 **Required Date:** 4/25/13

**Start Qty:** 1.00 **Required Qty:** 1.00

D3832-13 Manufactured No 100 Each 11.0000 1 1

*D3832-13*

Mesh (Lid)

** CC 13-4-18

B 100042 → 1

| Location | Loc Qty | Loc Code |
|---|---|---|
| WA | 11 | |
| 98095 | 9 | |
| 99257 | 2 | |

D3833-7 Manufactured No 100 Each 23.0000 2 2

*D3833-7*

Mesh (Lid End)

** CC 13-4-18

B 99267 → 2

| Location | Loc Qty | Loc Code |
|---|---|---|
| WA | 17 | |
| 99267 | 17 | |
| WA007 | 6 | |
| 92456 | 2 | |
| 98097 | 2 | |
| 98477 | 2 | |

| QTY | PART NUMBER | DESCRIPTION |
|---|---|---|
| X | D2512 | BASKET LID ASSEMBLY |
| 2 | D2512-3 | RIB |
| 6 | D2512-5 | RIB |
| 3 | D2512-7 | RIB |
| 2 | D2232-1 | HINGE PLATE |
| 4 | D2236 | RIB |
| 1 | D2506 | LABEL PLATE |
| 2 | D2581 | MOUNTING BRACKET |
| 2 | D3825-043 | RIB ASSY (BASKET END, LID) |
| 1 | D3832-13 | MESH (LID) |
| 2 | D3833-7 | MESH, LID END |

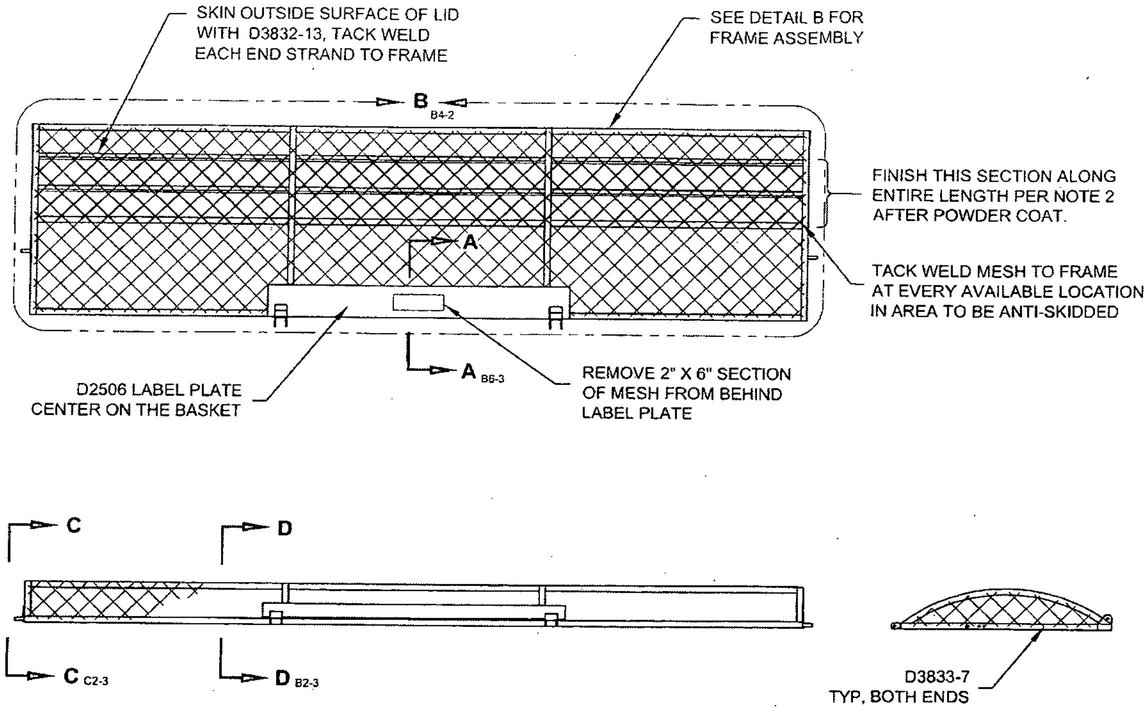


RELEASED 2012-08-03

99.543 MLS

13-04-11

| REV. | DESCRIPTION | BY | DATE |
|---|---|---|---|
| G | CORRECTED TYPO: D3825-043 WAS D3825-041 (ZN D3-1, B8-2, B1-2) | MB | 12.07.26 |
| F | GENERAL REVISION; REFORMATED DWG; DELETED DETAIL E AND RELATED NOTES IN VIEW C-C. REASON: PAR10-50. | MB | 12.05.11 |
| E | INCORPORATED D1 & D2. MATERIAL FOR -1, -3, -5, & -7 WAS 0.060 WALL. SHT 3 ZN C4 TOLERANCE REMOVED FROM 95.30 DIM. DRAWING TRANSFERED TO "B" FORMAT AND UPADTED TO CURRENT STANDARDS. SHT 3 VIEWS INVERTED FOR CLARITY. SHT 2 MESH MATERIAL CALLOUT UPDATED. | AJS | 08.06.17 |
| D | CHANGE HINGE | CP | 01.04.19 |
| C | REMOVE DOUBLE SKIN SECTION, ADDED MEMBERS, INCORP DEO 9074 | DS | 99.07.06 |
| B | ADDED LATCH CHANNEL & LABEL PLATE | BW | 96.05.24 |
| A | NEW ISSUE | BW | 95.11.21 |

**D2512 BASKET LID ASSEMBLY NOTES:**

1) MATERIAL: N/A
2) FINISH: POWDER COAT ENTIRE ASSEMBLY WHITE (4.3.5.2) PER DART QSI 005 4.3 AFTER POWDER COAT, SPRAY PAINT BLACK INSIDE SURFACE AND APPLY BLACK ANTI-SKID TO OUTSIDE SURFACES PER DART QSI 005 4.4
3) TOLERANCES: PER DART QSI 018 UNLESS OTHERWISE NOTED
4) UNITS: INCHES UNLESS OTHERWISE NOTED
5) BREAK SHARP EDGES: N/A
6) IDENTIFICATION: NONE
7) WEIGHT: N/A
8) WELD PER DART QSI 004

| | | |
|---|---|---|
| DESIGN | BW | **DART AEROSPACE LTD** HAWKESBURY, ONTARIO, CANADA |
| DRAWN | | |
| CHECKED | AJS | DRAWING NO. D2512 — REV. G — SHEET 1 OF 4 |
| MFG. APPR. | | |
| APPROVED | | TITLE: BASKET LID ASSEMBLY (350/212) — SCALE: NTS |
| DE APPR. | | |
| DATE | 12.07.26 | |

COPYRIGHT © 1995 BY DART AEROSPACE LTD
THIS DOCUMENT IS PRIVATE AND CONFIDENTIAL AND IS SUPPLIED ON THE EXPRESS CONDITION THAT IT IS NOT TO BE USED FOR ANY PURPOSE OR COPIED OR COMMUNICATED TO ANY OTHER PERSON WITHOUT WRITTEN PERMISSION FROM DART AEROSPACE LTD.

99543

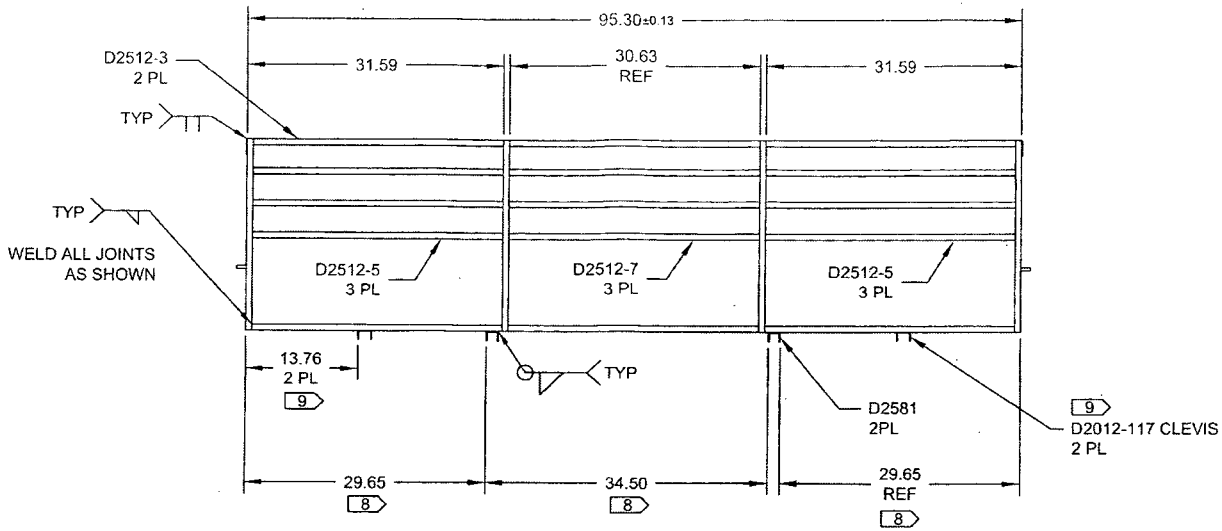


**DETAIL B** D6-1
FRAMEWORK ONLY SHOWN FOR CLARITY

RELEASED
2012 -00- 03

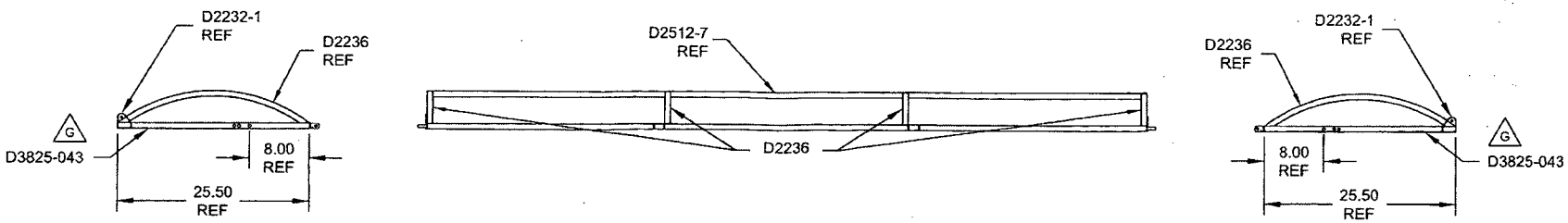


**NOTES:**
1) MATERIAL: NONE
2) FINISH: NONE
3) TOLERANCES: PER DART QSI 018 UNLESS OTHERWISE NOTED
4) UNITS: INCHES UNLESS OTHERWISE NOTED
5) BREAK SHARP EDGES: N/A
6) IDENTIFICATION: NONE
7) WEIGHT: N/A
8) LOCATE IN CONJUNCTION WITH ADJACENT D2581 ON BASKET BASE ASSEMBLY
9) FOR D130-701-041 ONLY

| | | |
|---|---|---|
| DESIGN | BW | **DART AEROSPACE LTD** HAWKESBURY, ONTARIO, CANADA |
| DRAWN | | |
| CHECKED | ADS | DRAWING NO. D2512 — REV. G — SHEET 2 OF 4 |
| MFG. APPR. | | |
| APPROVED | | TITLE. BASKET LID ASSEMBLY (350/212) — SCALE NTS |
| DE APPR. | | |
| DATE | 12.07.26 | |

COPYRIGHT © 1995 BY DART AEROSPACE LTD
THIS DOCUMENT IS PRIVATE AND CONFIDENTIAL AND IS SUPPLIED ON THE EXPRESS CONDITION THAT IT IS NOT TO BE USED FOR ANY PURPOSE OR COPIED OR COMMUNICATED TO ANY OTHER PERSON WITHOUT WRITTEN PERMISSION FROM DART AEROSPACE LTD

99543

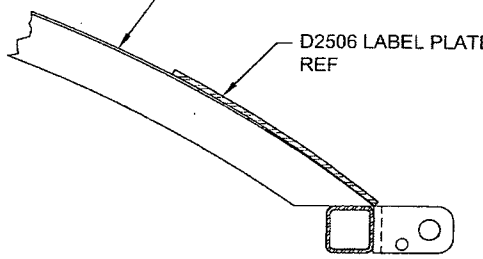


**SECTION A-A** C6-1
(ROTATED 90° CCW)

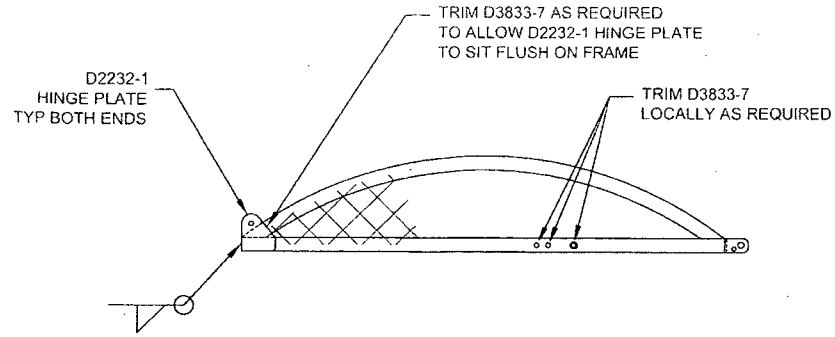


**VIEW C-C SIMILAR BOTH END RIBS** B8-1

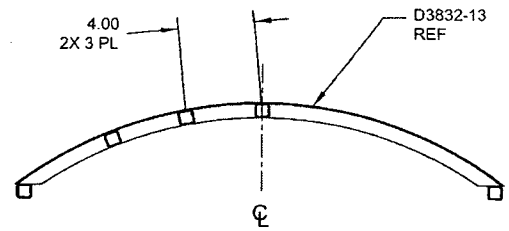


**SECTION D-D SAME BOTH CENTER RIBS** B7-1

RELEASED
2012 -08- 03

| | | |
|---|---|---|
| DESIGN | BW | **DART AEROSPACE LTD** HAWKESBURY, ONTARIO, CANADA |
| DRAWN | | |
| CHECKED | ASS | DRAWING NO. D2512 — REV. G — SHEET 3 OF 4 |
| MFG. APPR. | | |
| APPROVED | | TITLE: BASKET LID ASSEMBLY (350/212) — SCALE: NTS |
| DE APPR. | | |
| DATE | 12.07.26 | |

COPYRIGHT © 1995 BY DART AEROSPACE LTD
THIS DOCUMENT IS PRIVATE AND CONFIDENTIAL AND IS SUPPLIED ON THE EXPRESS CONDITION THAT IT IS NOT TO BE USED FOR ANY PURPOSE OR COPIED OR COMMUNICATED TO ANY OTHER PERSON WITHOUT WRITTEN PERMISSION FROM DART AEROSPACE LTD.

99543

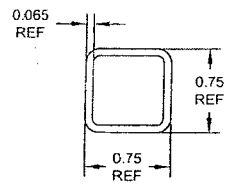


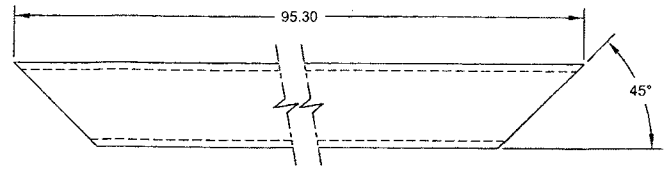


**D2512-3 RIB**

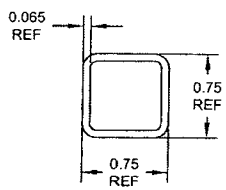


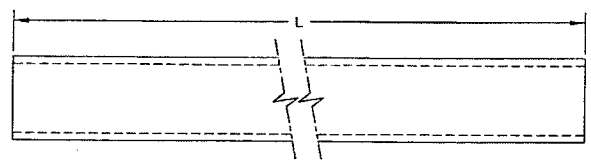


**D2512-X RIB**

| DART PART NUMBER | L |
|---|---|
| D2512-5 | 30.84 |
| D2512-7 | 30.63 |

RELEASED
2012-08-03

**D2512-5/-7 NOTES:**

1) MATERIAL: AISI 304/316 SEAMLESS STAINLESS STEEL SQUARE TUBING PER ASTM A554/A269 MILL FINISH, 0.75 X 0.75 X 0.065 WALL REF. DART SPEC M304TS0.750W.065
2) FINISH: N/A
3) TOLERANCES: PER DART QSI 018 UNLESS OTHERWISE NOTED
4) UNITS: INCHES UNLESS OTHERWISE NOTED
5) BREAK SHARP EDGES: 0.005 TO 0.010 MAX
6) IDENTIFICATION: NONE
7) WEIGHT: N/A

| | | |
|---|---|---|
| DESIGN | BW | **DART AEROSPACE LTD** HAWKESBURY, ONTARIO, CANADA |
| DRAWN | | DRAWING NO. D2512 — REV. G — SHEET 4 OF 4 |
| CHECKED | ASS | TITLE: BASKET LID ASSEMBLY (350/212) — SCALE: NTS |
| MFG. APPR. | | |
| APPROVED | | |
| DE APPR. | | |
| DATE | 12.07.26 | |

COPYRIGHT © 1995 BY DART AEROSPACE LTD
THIS DOCUMENT IS PRIVATE AND CONFIDENTIAL AND IS SUPPLIED ON THE EXPRESS CONDITION THAT IT IS NOT TO BE USED FOR ANY PURPOSE OR COPIED OR COMMUNICATED TO ANY OTHER PERSON WITHOUT WRITTEN PERMISSION FROM DART AEROSPACE LTD.